Heavy Duty Drawbars
John Deere | 9RX

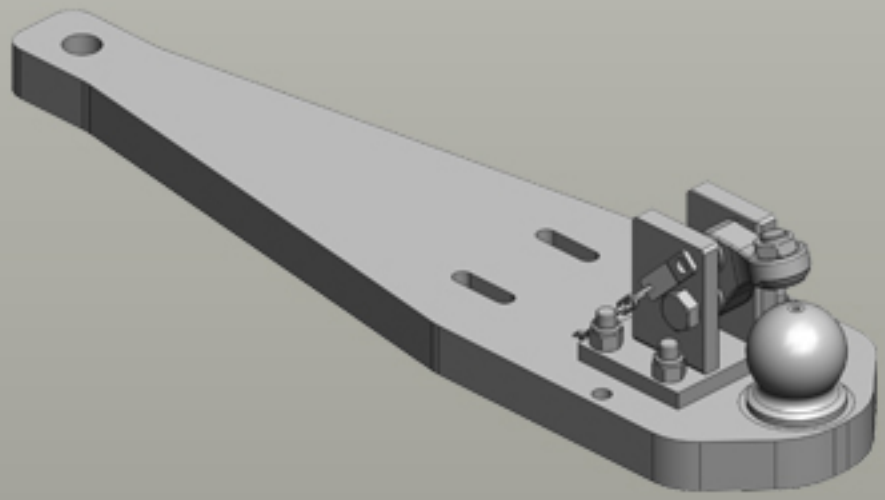

scharmüller
ANHÄNGERKUPPLUNGEN

SCHARM LLER Gesellschaft m.b.H & CoKG
A-4892 Fornach, Doppelm hle 14
Phone 00 43 (0)76 82/63 46, Fax - 50
e-Mail: office@scharmueller.at **www.scharmueller.at**

scharmüller
ANHÄNGERKUPPLUNGEN

Heavy Duty Drawbars

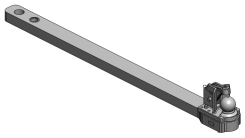

Art.Nr. 00.962.410.0-A17 | Heavy Duty Drawbars | Standard
K110 Ball Coupling System |

• Please request Technical Drawing | • fits to Original Drawbar Frame (ex factory)

Alternative color

00.962.410.0-A17 (JD-Green)

Technical Values*

Lenght (mm): 2225 | **Wide (mm):** 127 | **Assembly-Positions:** 2 | **Thickness (mm):** 75 | **Locking:** K80® Manual |
Max. Permissible D-Value (kN): 120 | **Max. Permissible Vertical Load (kg):** 4000

Adapted for Tractor

John Deere: **9RX:** 9.470, 9.520, 9.570, 9.620;

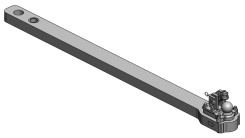

Art.Nr. 00.964.410.0-A17 | Heavy Duty Drawbars | Standard
K80® Ball Coupling System |

• Please request Technical Drawing | • fits to Original Drawbar Frame (ex factory)

Alternative color

00.964.410.0-A17 (JD-Green)

Technical Values*

Lenght (mm): 2225 | **Wide (mm):** 127 | **Assembly-Positions:** 2 | **Thickness (mm):** 75 | **Locking:** K80® Manual |
Max. Permissible D-Value (kN): 91,3 | **Max. Permissible Vertical Load (kg):** 4000

Adapted for Tractor

John Deere: **9RX:** 9.470, 9.520, 9.570, 9.620;

*For further technical (composite) values please read the installation and operating instruction.
graphics only symbolic | errors and misprints reserved.